MASS. EA20.2: V59

UMASS/AMHERST
312066016589434

GOVERNMENT DOCUMENTS COLLECTION

OCT 23 1998

University of Massachusetts Depository Copy

VERMICOMPOSTING

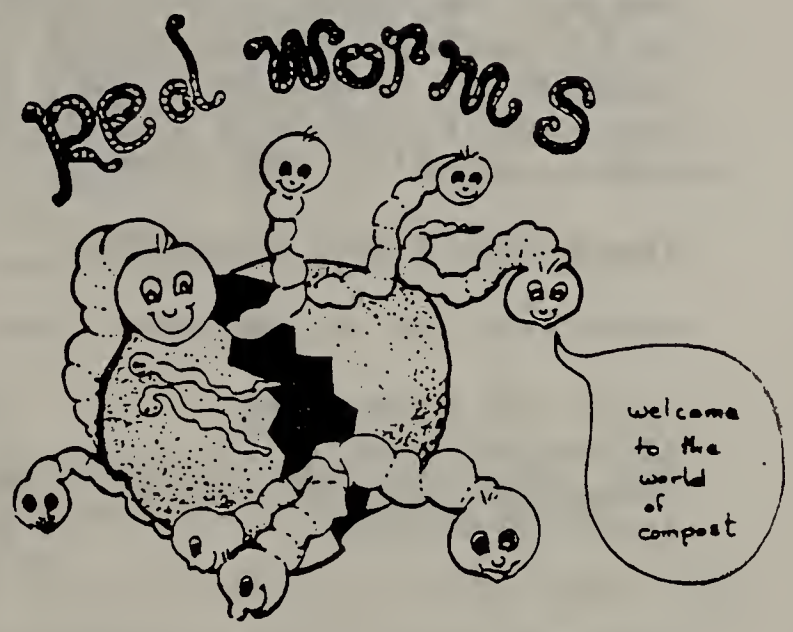

Composting is a natural process where kitchen and yard wastes decompose into a dark, nutrient-rich, earth-smelling soil conditioner. Perhaps you've considered backyard composting but live in a high rise or don't relish the thought of tramping through your garden in the middle of a winter blizzard. If so, vermicomposting is the option for you.

What is vermicomposting?

Vermicomposting is simply composting with worms. The best kind of earth worm to use is the redworm. These worms are incredible garbage eaters! They eat and expel their own weight every day; even a small bin of redworms will yield pounds of rich sweet-smelling compost. Finished compost can be harvested in as little as two to three months. Redworms (aka "red wigglers") are extremely prolific. It takes about three weeks for fertilized eggs to develop in a cocoon from which two or more young worms can hatch. In three months the worms are sexually mature and will start breeding. Within a year you'll be able to give worms away to get a friend started!

Where can I get a worm bin?

For 1 or 2 people a plastic bin can be purchased from a hardware store. Make sure the bin has a lid. A good-sized bin is available in Toronto from "The Moving Store" (416) 789-4188. For 4 to 6 people, a design sheet to build your own bin is available from the Recycling Council of Ontario.

# People	Quantity of Worms	Bin Size
1 or 2	1 lb.	1ft x 1.5ft x 2ft
2 or 3	1 lb.	1ft x 2ft x 2ft
4 to 6	2 to 3 lbs.	1ft x 2ft x 3.5ft

How do I set up the bin?

Make sure 8-10 holes (approx 1/4") are drilled in the bottom of the bin for adequate drainage. Line the bottom with fine nylon mesh to prevent the worms from escaping. Raise up the bin on some type of blocks with a tray underneath. Now you need to think about bedding for the worms. Redworms can survive and breed in many kinds of bedding

materials. The important thing to remember is that the "red wiggler" is a manure worm and will eat its own bedding. Materials such as grass clippings, dried leaves, chopped plants, straw, loam, aged animal manures, ground cardboard, shredded paper or dampened peat moss can all be used. (Make sure to mix peat moss with other bedding as it is too acidic to use alone.) The important thing is to keep the bedding as moist as a very well wrung sponge. Bedding can be mixed, e.g., half shredded paper, half peat moss. Now comes the fun part...getting the worms!

Where can I get Redworms?

Redworms can be ordered from the following suppliers and outlets:

Cape Cod Worm Farm
30 Center Ave.
Buzzards Bay, MA 02532
(508) 759-5664

Commonwealth Wormery
P.O. Box N122
Westport, MA 02790
Wendy Henderson
(508) 636-8981

The Green Planet
57 Lincoln St.
Newton Highlands, MA 02161
(617) 332-7841

You may also find a commercial source of redworms in your area by checking the Yellow Pages under the heading "Fishing Bait." Be sure to ask for redworms or red wigglers. If the company does not carry them, you might suggest that they consider doing so.

In nature, redworms can be found in decaying leaves, manure piles or other organic material, such as compost piles. If you have access to such areas, you can collect your own redworms.

There are several commercial worm bins and "worm kits" currently on the market. The "worm kit" includes a bin, worms, and accessories. In addition to the above suppliers, bins and kits are available from:

Eva Sommaripa
Eva's Gardens
105 Jordan Road
S. Dartmouth, MA 02748
(508) 636-5869

Mary Appelhof
Flowerfield Enterprises
10332 Shaver Rd.
Kalamazoo, MI 49002
(616) 327-0108

David Lovler
Growing Systems
99A Fayerweather St.
Cambridge, MA 02138
(617)492-5689

What do I feed them?

Worms will eat just about any type of kitchen waste including vegetables, fruits, coffee grinds, tea bags and egg shells (crushed.) It's better to avoid meats and fats. Dig the waste into the bedding. To prevent the presence of fruit flies, bury the food scraps completely, so that they are always covered by bedding. For fastest decomposition, chop or shred the food scraps into small pieces.

Can worms live outside during colder months?

Worms prefer temperatures between 40 and 80 degrees Fahrenheit. If you live in an apartment building they can live quite happily out on the balcony until temperatures drop to 40 degrees. After that they should be taken indoors. Basements or garages that don't freeze are good locations for worm bins.

How can I harvest the finished compost?

After about 3 months you'll notice that the volume of materials has dropped substantially and the original bedding is no longer recognizable. At this point the finished compost and worms can be moved over to one side of the bin and new bedding added to the vacant side. Put new food wastes into the fresh bedding only so the worms will move from the finished compost in search of new food. After two weeks or so remove the lid under a bright light source. The worms are sensitive to light and will burrow away from it. Scoop out the finished compost a few layers at a time and place in a plastic bag until you're ready to use it.

How can I use the finished compost?

Vermicompost will provide nutrients to your plants and will help the soil hold moisture. It can be used in a number of different ways:
1 - Sprinkle into a seed row when planting.
2 - When transplanting, add a handful of soil to the hole you have dug for the plant.
3 - Use as a top dressing, sprinkling the compost around the base of your plants.
4 - Mix with potting soil (half and half) for house plants.

Resources:

Worms Eat My Garbage, Mary Appelhof, Flower Press, Michigan, 1982, 100 pp. Available from:

The Green Planet
57 Lincoln St.
Newton Highlands, MA 02161
(617) 332-7841

Bramen Co., Inc.
45 Mason St.
Salem, MA 01970
(508) 745-7765

The Village Store
999 Main Rd.
Westport, MA 02790
(508) 636-2572

*In addition, if you go to your local garden supply store and request that they order Worms Eat My Garbage (or The Rodale Guide to Composting or Let It Rot!), then those books will be readily available to others in your community.

Raising the Lively Reds Written and published by Terra Publishing for Early Bird Ecology and Bait Farms Ltd., 1988, 42 pages. Describes how to raise and market worms. Available from Early Bird Ecology and Bait Farms. See contact information above. Cost: $15.95 incl. postage.

This fact sheet was originally produced as part of COMPOST ONTARIO, a project run by the Recycling Council of Ontario with funding from Barclay Recycling Inc. and the Ontario Ministry of the Environment.

Recycling Council of Ontario
489 College St., Suite 504
Toronto, Ontario M6G 1A5
October 1990

It is being distributed by the Massachusetts Department of Environmental Protection Composting Program by permission of the Recycling Council of Ontario.

1 - 2 - 3 WORM COMPOSTING BIN

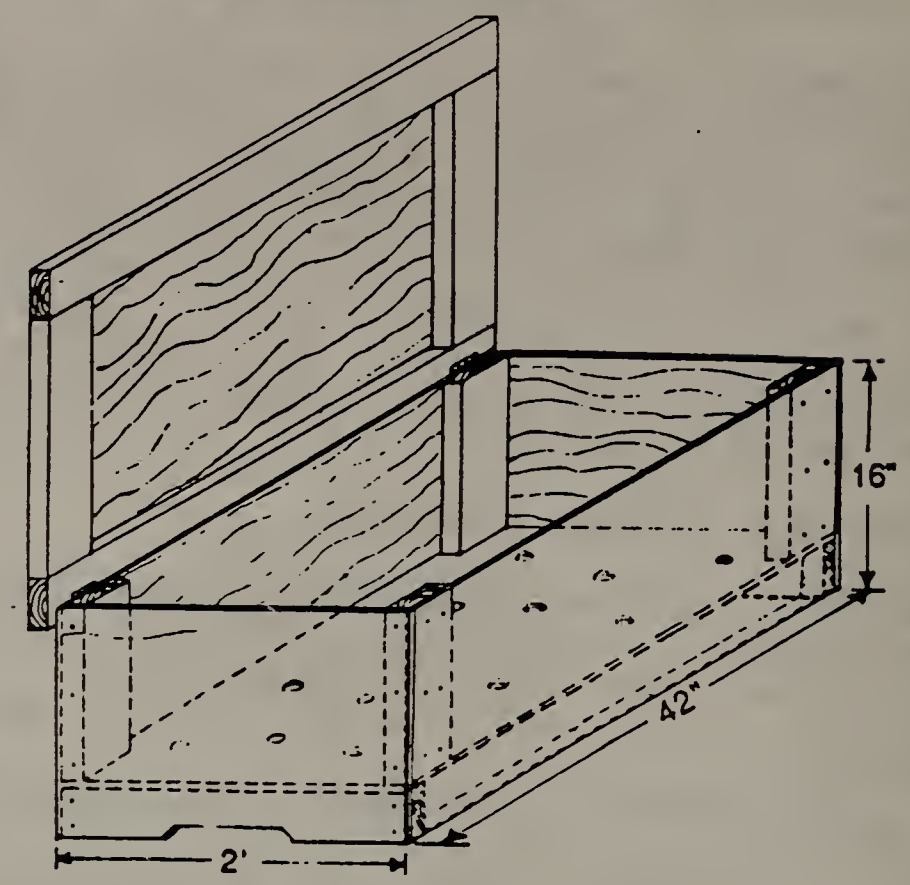

This system is designed for composting vegetable food wastes using red worms. Food wastes and worms are "bedded" in shredded and moistened newspaper, cardboard, peat or brown leaves. The worms turn both food wastes and bedding into a high-quality compost suitable for use on house plants, seedlings or general garden use.

To maintain this system simply rotate burial of food wastes throughout the bin. Every 3-6 months compost should be moved to one side of the bin and new bedding added to the empty half. At this time start burying wastes in the new bedding only. Within one month worms will populate the new bedding, finished compost may be harvested and the rest of the bin can be rebedded. During the winter worm bins should be kept in a cool indoor space such as a basement or warm garage to avoid freezing. A properly maintained worm bin is odorless. Bins may be placed in a shady outdoor space the remainder of the year. Flies may be controlled by placing a sheet of plastic over the bedding. Prevent the presence of fruit flies by burying the food scraps completely, so that they are always covered by bedding.
This bin can be built for about $35 with new wood and hardware, or less using recycled materials. Worm bins can also be made from wooden boxes or other containers. Any worm bin must have drainage in the bottom and a tight fitting lid to keep moisture in and pests out. A starter batch of worms can be purchased at a small additional cost, or find some in an old compost pile ! **Seattle Tilth** sells red worms at the Backyard Composting Demonstration Site. For more information see Mary Appelhof's book, Worms Eat My Garbage, also available from Seattle Tilth.

For information on King County's composting demonstration sites or waste reduction, recycling and composting programs, call the King County Solid Waste Division at 296-6542.

Our appreciation is extended to the Seattle Engineering Department's Solid Waste Utility and the Seattle Tilth Association for allowing King County to utilize this material which was designed for their Community Education Program.

This bin is sized to suit a family of four-six people generating about seven pounds of food waste each week.

Materials:

1 1/2" sheet of plywood
1 12 foot 2x4
1 16 foot 2x4
2 lbs. 6d galvanized nails
1/2 lb. 16d galvanized nails
2 galvanized door hinges

Tools:

Tape measure, skill saw or rip hand saw, hammer, saw horses, long straight edge or chalk snap line, screwdriver, and drill with 1/2" bit.
Use eye and ear protection.

Note: Do not use wood that has been pressure-treated or treated with toxic preservatives. Non-toxic wood preservatives are available.

Construction Details:

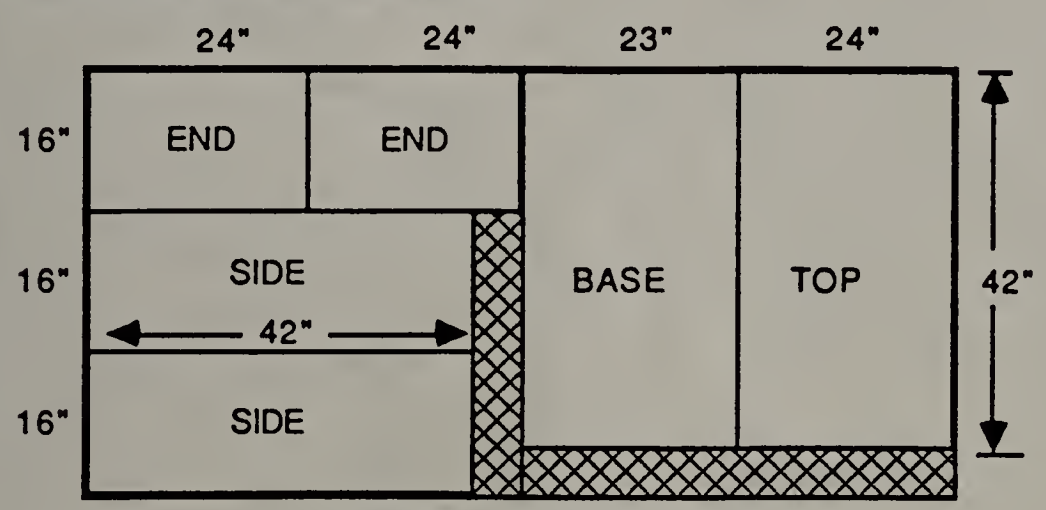

4' X 8' SHEET OF 1/2" PLYWOOD

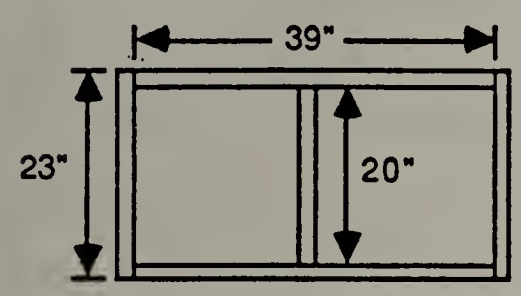

BASE FRAME 2X4s ON EDGE

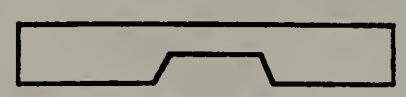

END BASE BOARDS CAN BE NOTCHED FOR HANDHOLDS

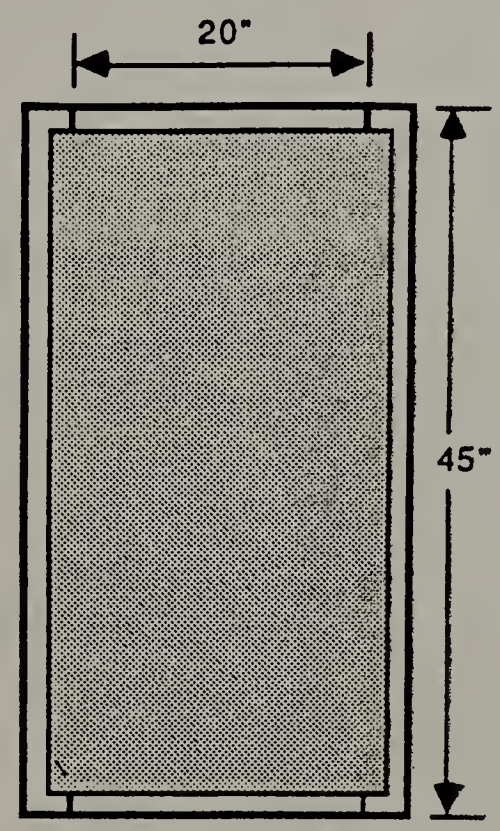

TOP LID 2 X 4 FRAME WITH PLYWOOD COVER

Measure and cut plywood as indicated in drawing above. Cut the 12 foot 2x4 into five pieces: two 39", two 23", and one 20" long. Nail the 2x4s together on edge with two 16d nails at each joint as illustrated in the Base Frame diagram. Nail the plywood base piece onto the 2x4 frame.

Cut four 1 foot lengths out of the 16 foot 2x4. Take each plywood side piece and place a one foot 2x4 under each of it's ends so that the 2x4 is flush with the top and side edges of the plywood, and nail the boards into place. Nail the side pieces onto the base frame. To complete the box, nail the ends onto the base and sides. To reinforce the box make sure there is a nail staggered at least every 3 inches wherever plywood and 2x4s meet. Drill twelve 1/2" holes through the bottom of the box for drainage.

To build the lid, take the remaining 12 foot 2x4 and cut it into two 45" pieces and two 20" pieces and lay them flat, short pieces on the inside as indicated in diagram above, so that the plywood top is inset from the edges of the 2x4 by 1-1/2" all the way around the perimeter. Nail the plywood onto the 2x4 securely. Place the hinges on the backside of the box at both ends on the 2x4s, and on the under side of the 2x4 lid frame, so that the lid will stand upright when opened.

Printed on Recycled Paper

2 X 2 EARTHWORM COMPOSTING BIN

This bin will accommodate the needs of one to two people generating about four pounds of food waste each week.

MATERIALS

1 - 1/2" sheet of plywood
36 - 2" ardox galvanized nails
Non-toxic wood preservative

TOOLS

Same as for larger bin.

CONSTRUCTION:

Cut four pieces of plywood 23 1/2" x 8" for the sides. Nail them together, overlapping at the corners.

Cut one piece of plywood 24" x 24" for the bottom. Secure the bottom to the sides using about five nails per side. Drill twelve 1/2" holes in the bottom for aeration and drainage.

Use a dark plastic sheet over the top of the bedding as a cover or make a lid out of the remaining plywood.

This design sheet was originally produced for the Community Composting Education Program in Seattle, Washington.

It is being distributed as part of COMPOST ONTARIO, a project run by the Recycling Council of Ontario with funding from Barclay Recycling Inc. and the Ontario Ministry of the Environment.

Recycling Council of Ontario
489 College St., Suite 504
Toronto, Ontario M6G 1A5

October 1990

For more information about worm composting and bin-sizing, refer to:
Worms Eat My Garbage by Mary Appelhof. Flower Press, Michigan, 1982.